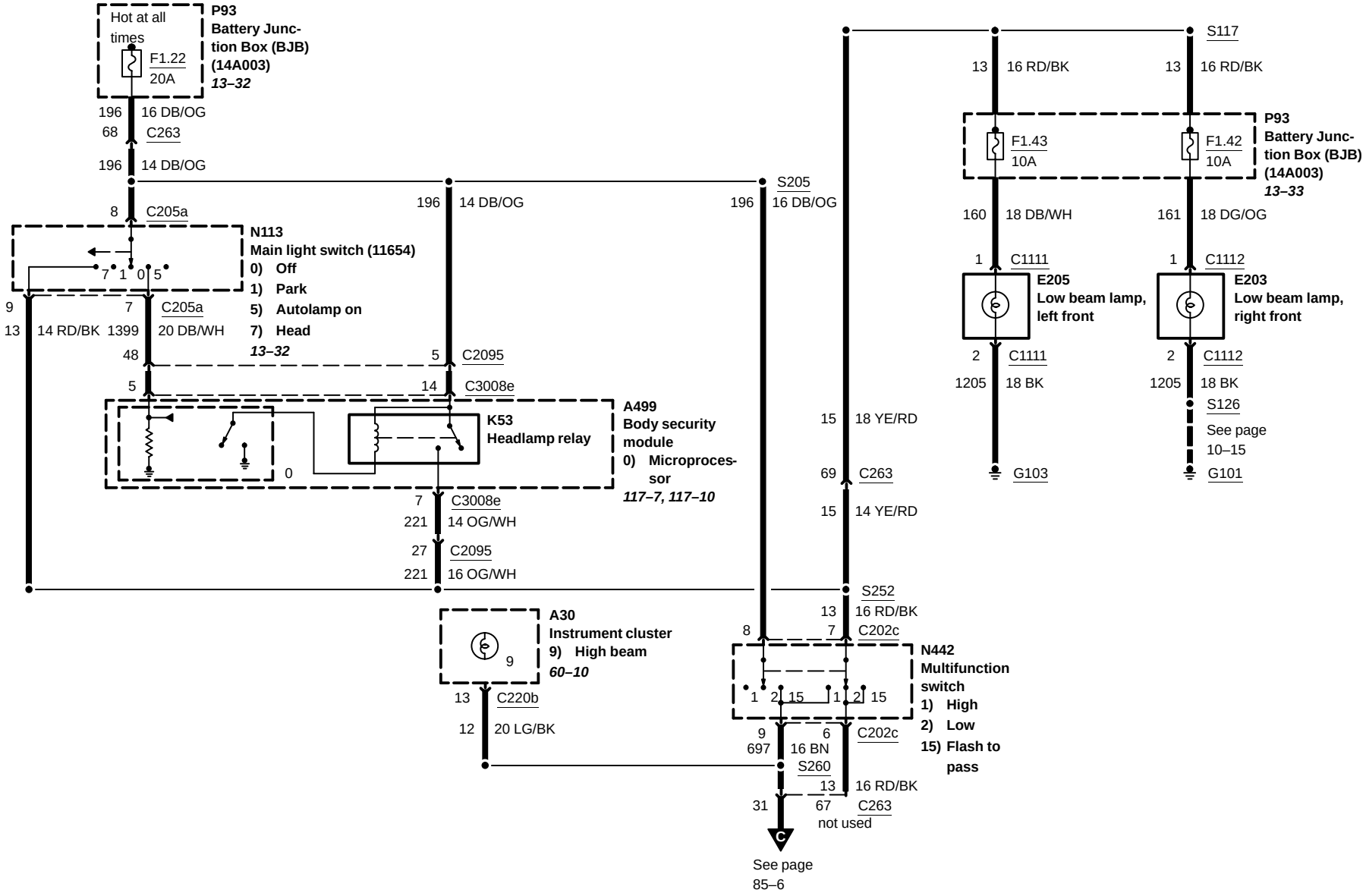Late build, Explorer